Oceanic

Sauna & Steam

STEAM GENERATOR
(Domestic & Light Commercial)

Assembly and operating manual

26.08.20

Oceanic Ltd, Pountney Street, Wolverhampton, WV2 4HX
Phone: 01902 450 550 sales@oceanic-saunas.co.uk www.oceanic-saunas.co.uk

Table of contents

1. Introduction . . . 3

2. Important Notes . . . 3

3. Safety Precautions . . . 3

4. Electrical connection . . . 3

5. Specification . . . 4
5.1. Steam Generator Unit Parameters . . . 4
5.8. Wiring multiple steam generators . . . 5
5.2. Steam Generator Frame Sizes . . . 6
5.3. Clearance distances . . . 6
5.4. Ventilation . . . 6
5.5. Steam Generator Parts Description . . . 7
5.6. Table 2. OC-A Controller Parameters . . . 8
5.7. Temperature Sensor Parameters . . . 8

6. OC-A Controller Description . . . 9

7. Installation . . . 10
7.1. Generator Size . . . 10
7.2. Steam Generator Location . . . 11
7.3. Water and Steam Connections . . . 12
7.4. Installation for controller and temperature probe . . . 13
7.5. Installations for power supply and control cable . . . 13
7.6. Installing a light . . . 13

8. Steam on Demand Function (Only supplied with commercial generators) . . . 14

9. Circuit Diagrams . . . 14

10. Testing and operation . . . 16
10.1. Setting time and temperature . . . 16
10.2. Steam on Demand . . . 16

11. Troubleshooting guide . . . 17

12. Maintenance . . . 18
12.1. Descaling procedure . . . 18

13. Guarantee . . . 19

1. Introduction

Thank you for choosing to buy our Oceanic steam generator, please take the time to read these instructions before you begin as they contain important information about the installation and maintenance requirements.

"Oceanic" steam generators are available in specifications from 3kw to 12kw and are equipped with our OC-A intelligent controller. With this not only can you control the temperature and time duration of your steam bath but also the light of the steam room, the automatic drain valve, key-lock, alter the temperature display between Centigrade and Fahrenheit; as well as displaying the steam generator's status by the 8 LED's on the panel, heating, water inlet, temperature, drain status etc. note also that one "OC-A" controller can control multiple "Oceanic" steam generators. Every "Oceanic" steam generator is thoroughly tested before leaving the factory so there may be the remains of water inside the boiler.

2. Important Notes

- Read the manual before installation and operation.
- This Equipment must be installed by competent person.
- This equipment must be connected to an all pole isolator
- Disconnect the power supply before exposing electrical connections.
- Confirm the right voltage to your steam generator 1 or 3 phase.
- For hard water areas please read our descaling section on page???
- Water supply must have maximum of 1 bar pressure, recommend the use of a pressure reducing valve if necessary

3. Safety Precautions

- Elderly persons, pregnant women, or these suffering heart disease, high blood pressure, diabetes or not in good health are advised to seek medical opinion before using a steam room.
- Do not smoke in the steam room.
- Avoid using the steam room immediately after strenuous exercise.
- Do not use the steam room when under the influence of alcohol.
- Leave the steam room at once if you feel sleepy, sick or uncomfortable.
- Ensure there is good ventilation for the steam room.
- We do not recommend that children under 16 use this product.
- Commercial operators should post a notice of these precautions in a prominent position.

Steam entering the steam room will be scalding hot; take care to position the inlet nozzle away from where users will sit and/or provide adequate guarding, post a notice to caution users.

4. Electrical connection

A qualified electrician will have no problem installing this system with the provided wiring schematic and with the help of the circuit diagram mounted inside the respective control unit. According to the valid regulations, the electrical connection of the steam generator and the control box has to be carried out by an authorised electrician. In case of a warranty claim, you are kindly requested to present a copy of the invoice from the electrician.

5. Specification

5.1. Steam Generator Unit Parameters

Model	Power	Current (amps)		Size (mm)			Steam outlet	Inlet	Drain	Nozzle Type
	Kw	**1N~**	**3N~**	**L**	**W**	**H**	**inches**	**inches**	**inches**	
Domestic										
OC-40	4	17A	-	390	190	335	1/2"	1/2"	1/2"	White
OC-60	6	26A	8.6A	390	190	335	1/2"	1/2"	1/2"	White
OC-80	8	35A	11.6A	450	190	353	3/4"	1/2"	1/2"	Chrome
Steam On Demand										
OC-60 S	6	26	8.6	390	190	335	1/2	1/2"	1/2"	Red
OC-80 S	8	35	11.6	450	190	353	3/4	1/2"	1/2"	Red
OC-90 S	9	39	13	450	190	353	3/4	1/2"	1/2"	Red
OC-105 S	10.5	46	15.3	390	206	415	3/4	1/2"	1/2"	Red
OC-120 S	12	52	17.3	390	206	415	3/4	1/2"	1/2"	Red

Please note that all models may not be available from your dealer.
Important note: Steam outlet should not be reduced

Domestic unit

Steam On-Demand unit

Note: To use the steam generator in single phase the L1 L2 and L3 must be linked together with the copper bridges that are supplied. This is not possible with the 4kw machine. See circuit diagram on page 15.

1/2"
Steam outlet

3/4"
Steam outlet

3/4"
Steam inlet

White Steam nozzle

Chrome steam nozzle

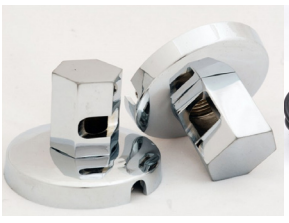

Steam On Demand button

5.8. Wiring multiple steam generators

If greater power is required one OC-A controller may be used to control two or more steam generators, e.g. if you need a 24KW steam generator you can use one OC-A controller to control two 12kw steam generator or three 10kw steam generators.

Multiple steam generators wiring schematic

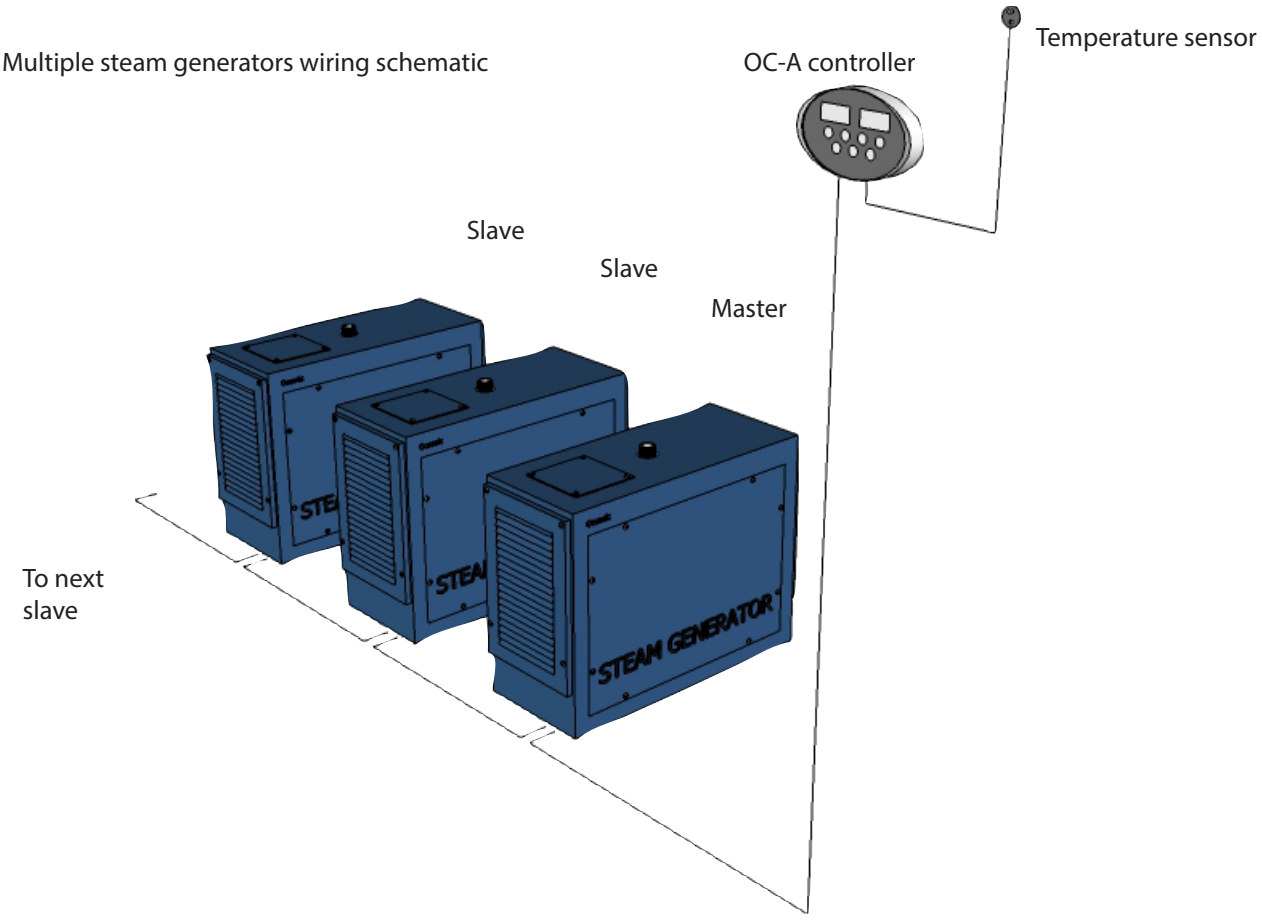

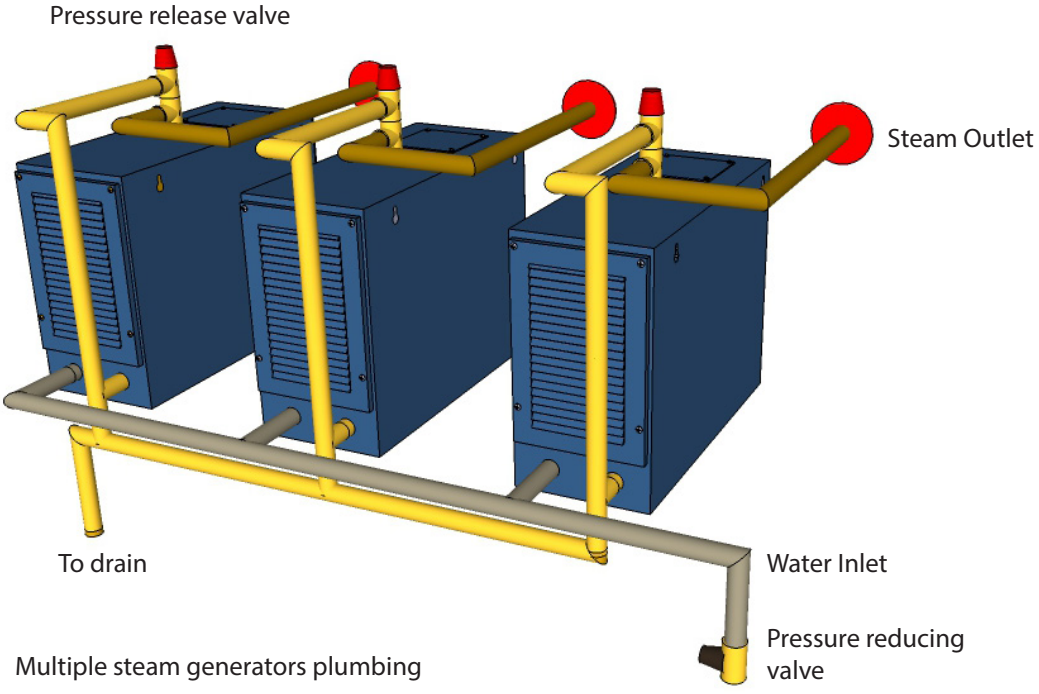

Multiple steam generators plumbing

5.2. Steam Generator Frame Sizes

Model	A	B	C	D	E	F	G	H
OC-40 - 60	390	190	335	25	135	45	72	60
OC-80-90	450	195	353	35	135	45	72	60
OC-10-120	390	206	353	25	135	45	77	60

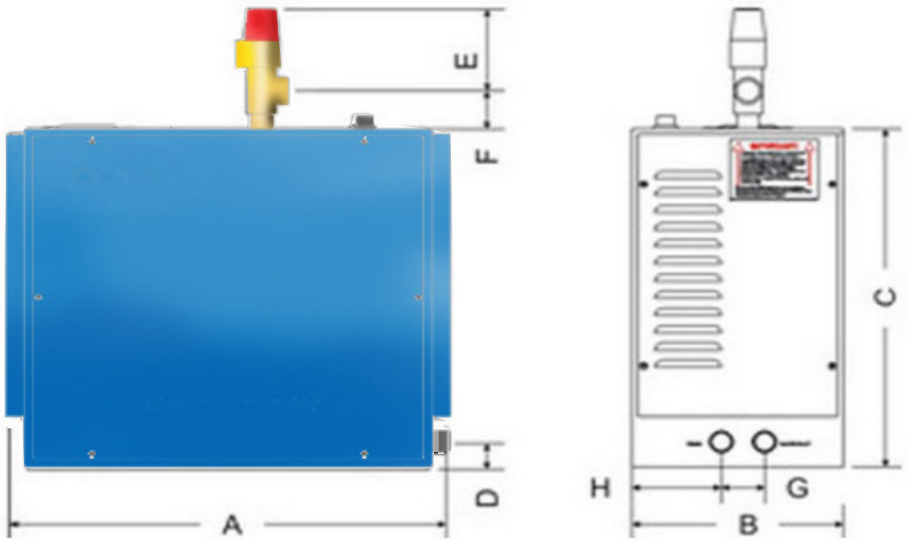

5.3. Clearance distances

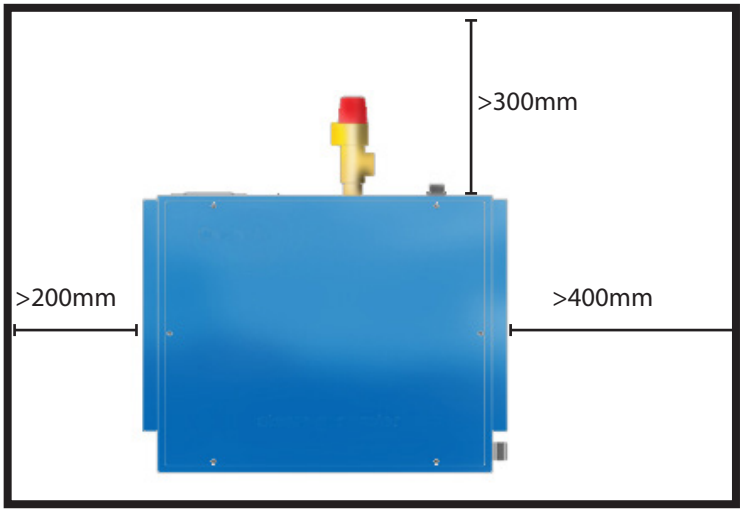

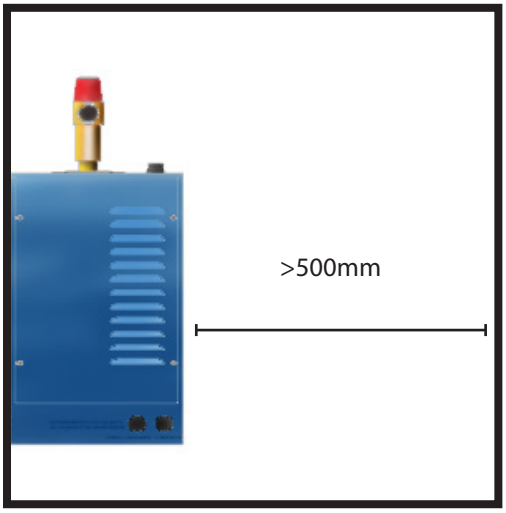

5.4. Ventilation

Ensure air flow into area where steam generator is housed.
For commercial use ensure good ventilation from at least two ducts within the housing of the generator

5.5. Steam Generator Parts Description

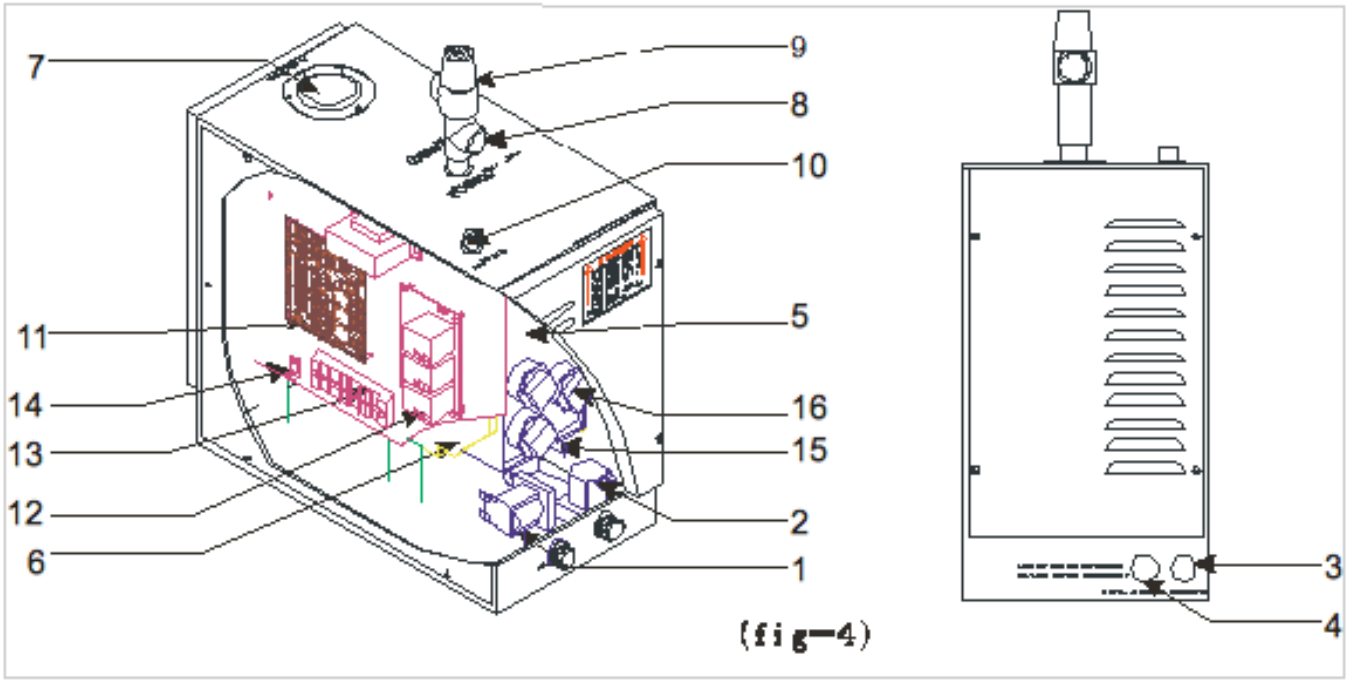

(fig-4)

No.	Part	Description
1	Water inlet valve	Automatically controls the water flow (maximum pressure 1bar)
2	Drain valve	Controller by controller. Turn on or turn off to drain water
3	Power entry	The route of power wire
4	Control cable entry	The route of control cable
5	Stainless steel tank	Boiler
6	Insulation material	Reduce the loss of the boiler heat
7	Water lever probe	Detect the water level
8	Steam outlet	Steam outlet
9	Pressure relief valve	Operates if the pressure in the boiler exceeds 1.2kg/ c m2
10	Overheat switch	Boil dry protector operates at 105 C
11	Main circuit board	Control center
12	Accessory circuit board	Connect and control the heat element
13	Terminal	Connection for power supply
14	Earth wire plug	Connection for earth wire
15	Water inlet	Water inlet to the boiler
16	Elements	Electrical heating elements

5.6. Table 2. OC-A Controller Parameters

Model	Working Time (m)	Temperature (°C)	Dimension L x W x H (mm)	Remarks
OC-A	15-240	30 - 60 °C	150 x 92 x 22	When the time window displays "Long" the generator will operate continuously until it is switched off.

5.7. Temperature Sensor Parameters

MODEL	Detected Scope		Max Cut out Temperature		Size (mm)		
	°C	°F	°C	°F	L	W	H
OC-S	0-110	32-230	60	248	76	42	27

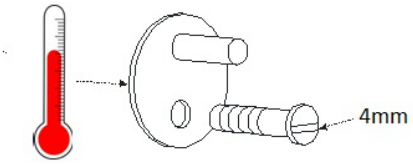

Minimum distances for temperature sensor installation

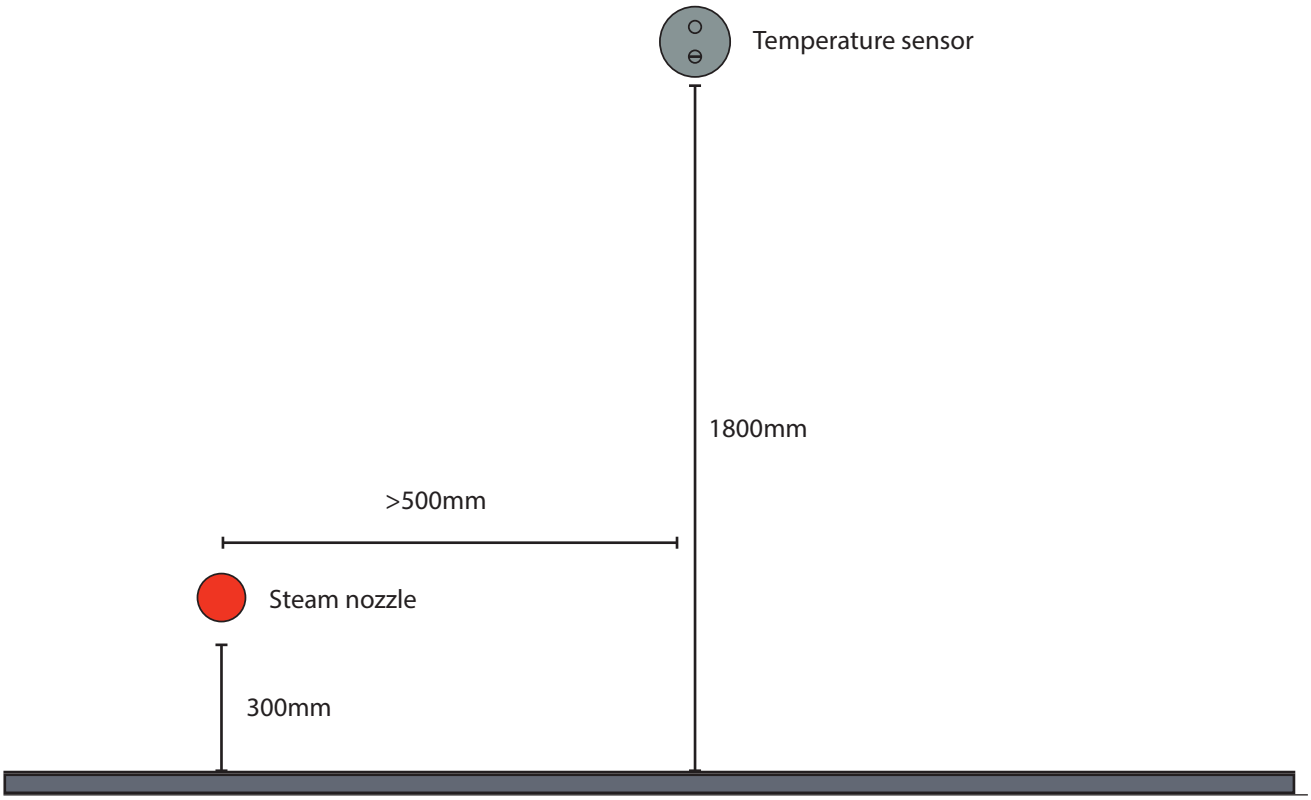

6. OC-A Controller Description

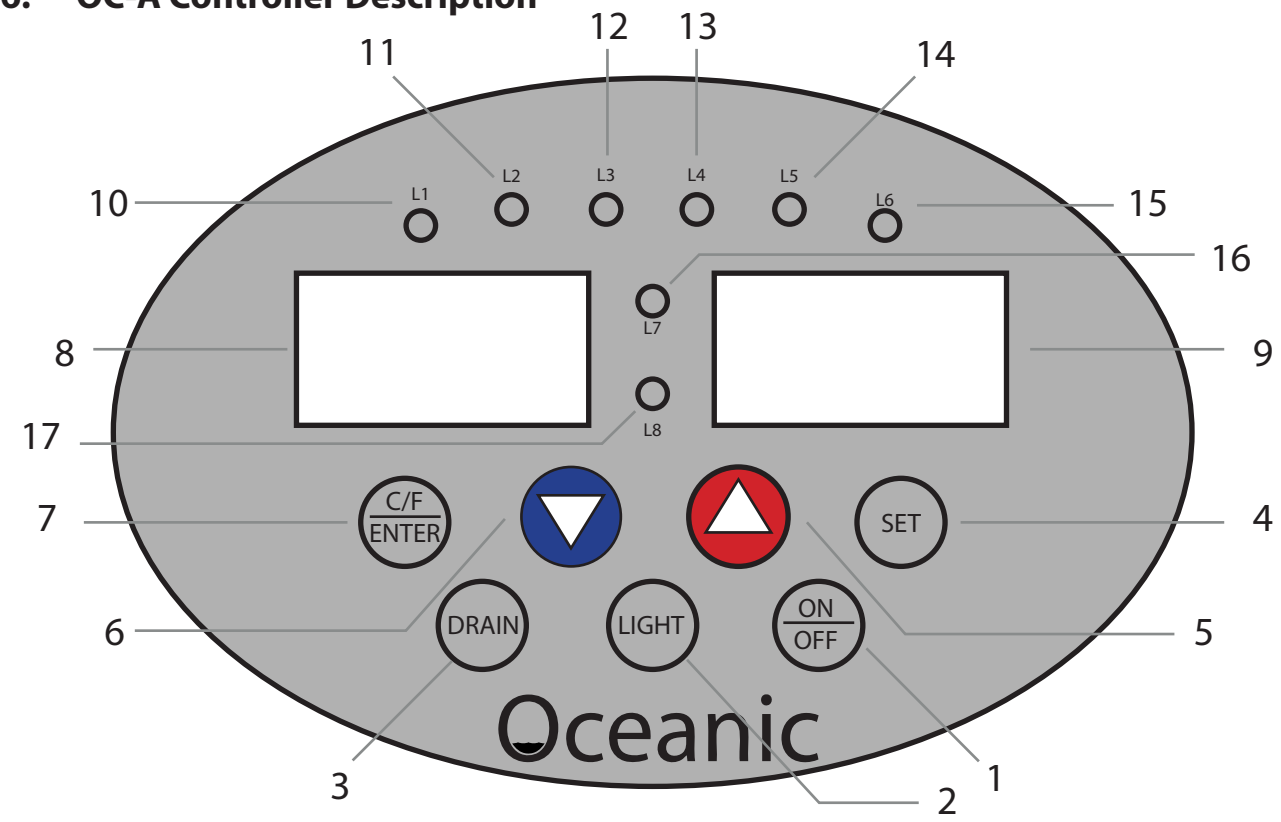

No	Part	Description
1	On/off	Push to operate
2	Light	Push to operate
3	Drain Control	Push to operate / Keep pressed for SOD/ Keep pressed for normal
4	Set	Preset time and temperature
5	/\	Increase button
6	\/	Decrease button
7	/ °C/F / ENTER	Change from centigrade to Fahrenheit / Enter change in settings
8	Time display window	Display the work time of the steam generator
9	Temp display window	Display the detected temperature of steam room
10	L1	Indicator LED for the light in steam room
11	L2	Indicator LED for water level – red, water is filling - green water level OK. Note if the LED remains red in excess of 5 minutes check water supply.
12	L3	Indicator LED for drain - red for draining - green for draining and filling at the same time
13	L4	Red means it is in SOD mode. Green means it is in normal mode
14	L5	Indicator LED for over heat, red means the steam generator was cut off as the heat element is too hot (lack of water, the heat elements may worked in air)
15	L6	Indicator LED for pressure - when the pressure in the boiler exceeds 1.2kg/c m2. It will switch on.
16	L7	Indicates the detected temperature is lower than the preset temperature and steam generator is heating.
17	L8	Indicates the detected temperature is higher than the preset temperature and the steam generator is idling.

7. Installation

- Isolate the power supply before installation
- Confirm the model you have selected is suitable for your steam room, please refer to chart 5
- Mount the steam inlet nozzle approximately 300mm up from the floor and it should be at least 200mm from person's body.
- If the steam generator is installed in an inaccessible place ensure that both the electrical power and water supply can be isolated in an emergency.
- To use the steam generator in single phase the L1 L2 and L3 must be linked together with the copper bridges that are supplied. This is not possible with the 4kw machine. See circuit diagram on page 15.
- The minimum water inlet pressure is 0.25 bar (2.5 Mpascals) and the maximum is 2 bar (20 Mpascals), for pressures in excess of this use a reducer before the valve.
- The steam pipe from steam generator to steam room should be kept to a minimum, pipes longer than 3 meters should be insulated to prevent heat loss. Steam pipes will be hot during use and must be protected against accidental contact. Steam entering the steam room will be scalding hot; take care to position the inlet nozzle away from where users will sit and/or provide adequate guarding, post a notice to caution users.
- Keep the number of right angle bends to a minimum and ensure that the run does not create a trap into which condensate would gather and cause a blockage I.e. the pipe must not go down and then up.
- There must be no valve or other blockage in the steam pipe
- The steam pipe should be metal of other material that can endure 150°C temperature, copper pipe is recommended.
- It is not recommended to install the Steam generator outdoors or where it might be affected by frost. Allow for a minimum space of 0.5 cubic meters to install the generator.
- Steam generator should be level side-to-side and front to back and should be installed so that the arrows on the case point up.
- Do not install the steam generator in close proximity to hazardous substances.

7.1. Generator Size

The table opposite should be referred to for guidance only. Please note that the size of generator required to heat a particular size of steam room will vary according to a number of factors including the type of material used for construction, the height of the steam room and the ambient temperature.

Generator Model	Steam Room Volume (m^3)
OC-40	1.8 - 4
OC-60	4.5 - 6
OC-80	4 - 7
OC-70	5 - 9
OC-90	6 - 10
OC105	7 - 11
OC-120	8 - 12
OC-140	11 - 15

For lightweight materials such as plastics and laminates 1 KW will heat up to 1 cubic meter of air for dense materials such as stones and ceramics which will conduct the heat away more rapidly allow for up to 2KW per cubic meter of air. Hot air rises so restricting the height to around 2 meters will ensure the user is sitting in the steam for higher ceilings you may need to increase the power requirement.

The following table is given as a guide; ambient air temperatures and frequency of use (number of door openings) can also affect the power requirements.

7.2. Steam Generator Location

The steam generator should be installed in dry well ventilated place in close proximity to the steam room. It can be placed on the floor or hung on wall.
To hang the generator on a wall drill 3 holes 8mm in diameter in accordance with the table below. Fix the top 2 screws in place first then hang the generator by the 2 keyhole shaped holes in the back plate. Then with the front cover removed fix the 3rd screw to secure the unit in place.

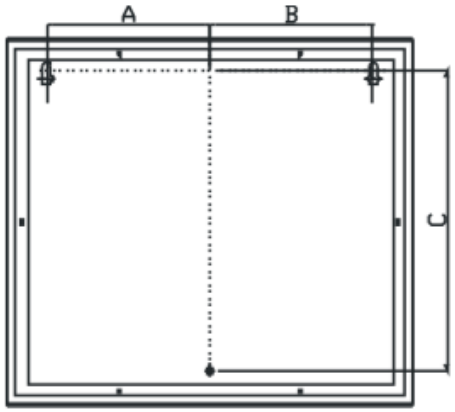

Model	A	B	C
OC-30 to OC-60	145	145	273
OC-70 to OC-90	175	175	291
OC-100 to OC - 120	145	145	353

The steam generator can be installed anywhere that is dry and has an airflow.
Example locations:

- Boxed under bench within steam room
- Cupboard in an adjacent room
- In the loft
- Up to 1.5m beneath the unit in a basement

Important notes:

- The steam pipe should be insulated and not travel further than 10 metres
- Do not reduce size of steam pipe at any point
- the steam pipe must not go down and then up, as this will create a trap and damage the steam generator.
- Steam emitted from inlet nozzle will be very hot, do not install underneath bench or above user's feet. We recommend the use of the Oceanic steam nozzle guard to protect user from the nozzle.

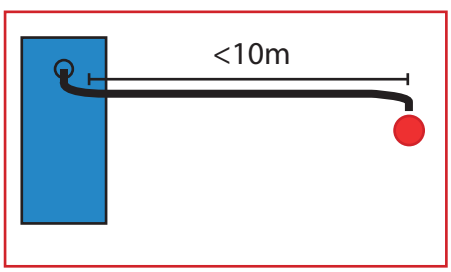

7.3. Water and Steam Connections

i. The water supply pipe and steam pipe should comply with local standards
ii. Connect the water inlet valve of the generator to the mains water supply using a flexible hose with 1/2 inch fittings.
iii. Steam outlet (1/2 inch or 3/4 inch) use the same dimension copper pipe to connect it, if the steam pipe is longer than 5 meter it should be insulated. During use the steam pipe will be very hot and must be protected against accidental contact. Note that according to the location it may be necessary to attach an additional length of pipe to the pressure relief valve in order to divert the steam flow to a safe direction should the valve operate.
iv. Connect the drain outlet to a suitable drain via a copper pipe with the appropriate fittings.

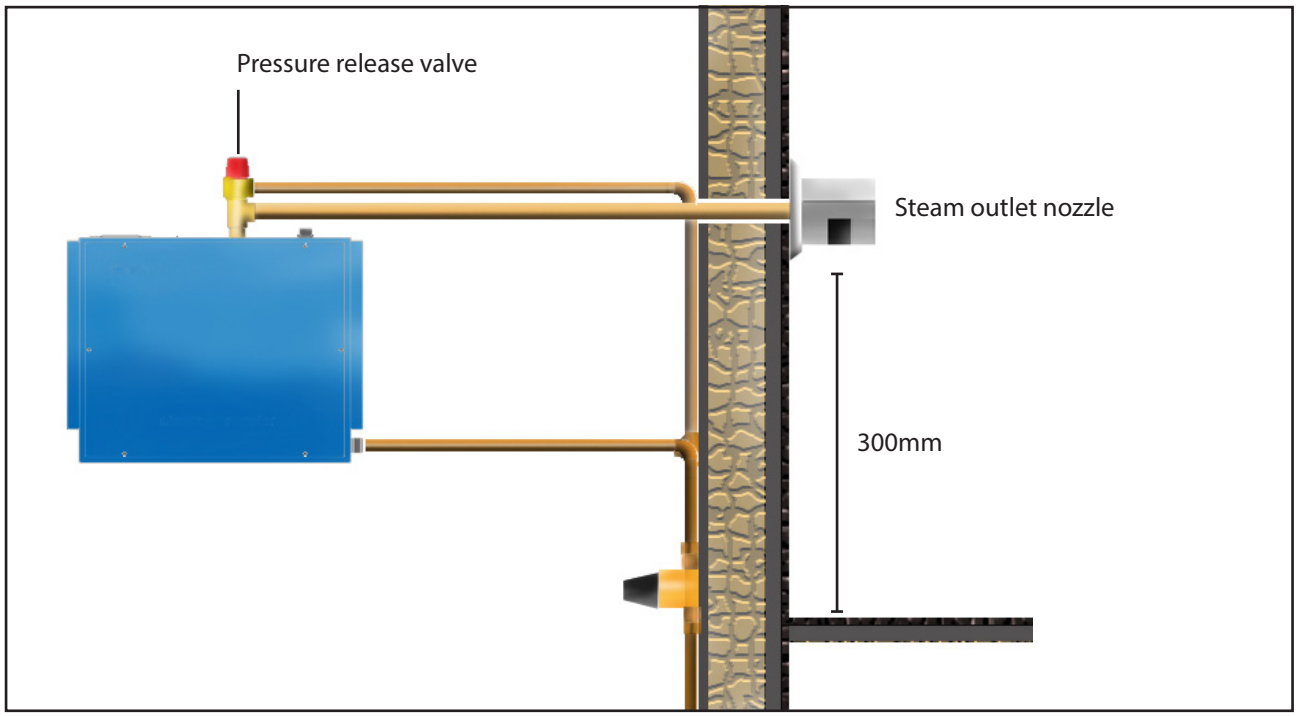

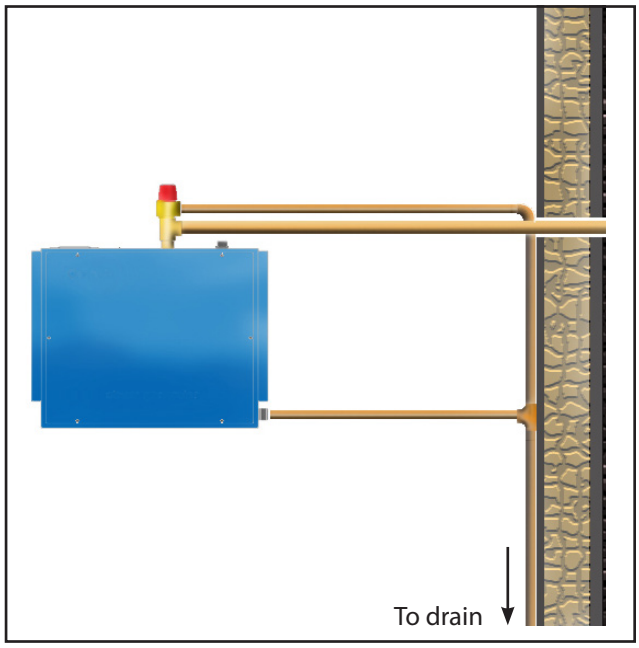

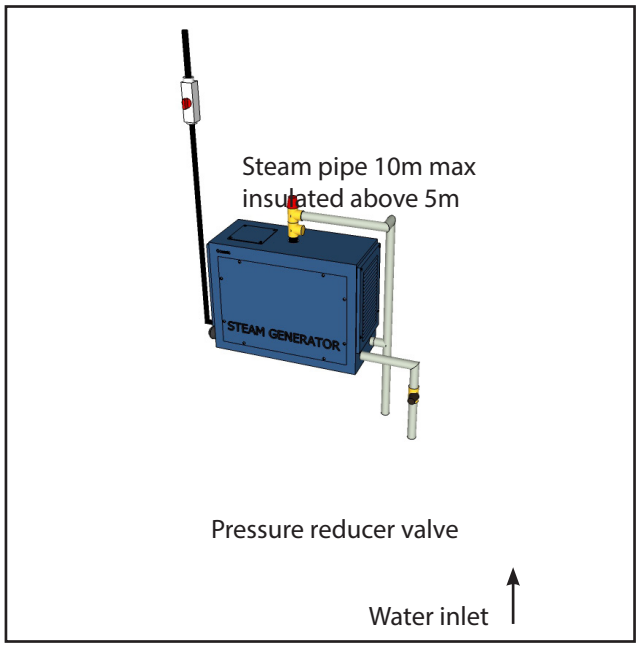

7.4. Installation for controller and temperature probe.

OC-A controller is waterproof and can be installed inside or outside the steam room according to customer preference.

i. For a better connection and to eliminate any future connection problems spray connection fluid or aerosol oil spray on the pins of the PS/2 cable(5pin cable) before plugging into the circuit board.
ii. Ideally the control panel should be installed at a height of approximately 1200mm for ease of use.
iii. Installation method: Open the front cover of steam generator. Pin the control cable (6 cores) and temperature sensor cable (2 cores) to the relevant ports.
iv. Control panel installation: pin one end to circuit board ports in steam generator connect the other end to the controller's cable.
v. Temperature probe installation: the temperature probe is installed inside the steam room at approximately 1.8 meters high and 0.5m away from the steam outlet. Use a 4mm screw fix it in place and then connect to the wire from the controller.
vi. Fix protective cover (supplied) over the temperature

Temperature Sensor

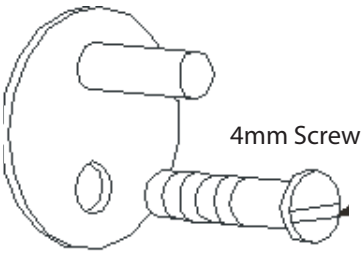

Cover to protect the temperature sensor

7.5. Installations for power supply and control cable

Confirm the correct voltage of power supply and wires.

Remove the knock out for the power cable entry and use a rubber grommet to protect the cable, connect to the conductors to the correct terminals – for single phase power supply use the copper bridge connectors, for 3 phase supply remove them. (Extra bridges can be found it provided) Remove the knock out for the control cable entry and use a rubber grommet to protect the cable, connect the cable to the relevant port on circuit board.

Ensure the power supply wire and control cable remain separated to prevent magnetic field of power supply wire from disturbing control cable signal.

7.6. Installing a light

i. The steam generator keypad has a light button which switched a 230v connection on the main circuit board upto 100watts in power.
ii. - Use the supplied grey connector with two blue wires to connect to the light empty output on the circuit board labelled "LIGHT"

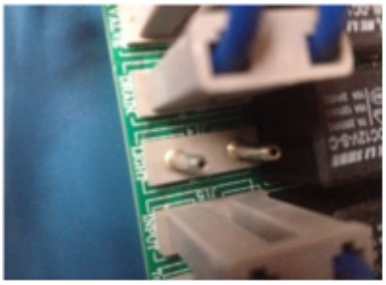

8. Steam on Demand Function (Only supplied with commercial generators)

Commercial operators may wish to take advantage of the steam on demand function which will allow customers to press the steam on demand button located outside the steam room after which the generator will operate for 30 minutes then stop until activated again.

Steam On Demand is an optional function for use in a commercial installation where the room is not alway occupied. When in SOD mode the generator will stay in 'standby' with the elements off when the user pushes the red SOD button steam is produced for 30minutes before returning to standby. This helps prolong the life of the generator, reduce maintenance and running costs. It also gives user some control without access to the main keypad, so they cannot affect the settings.

To set STEAM ON DEMAND – hold the drain button for 10 seconds until the screen says LONG and L4 goes red.

9. Circuit Diagrams

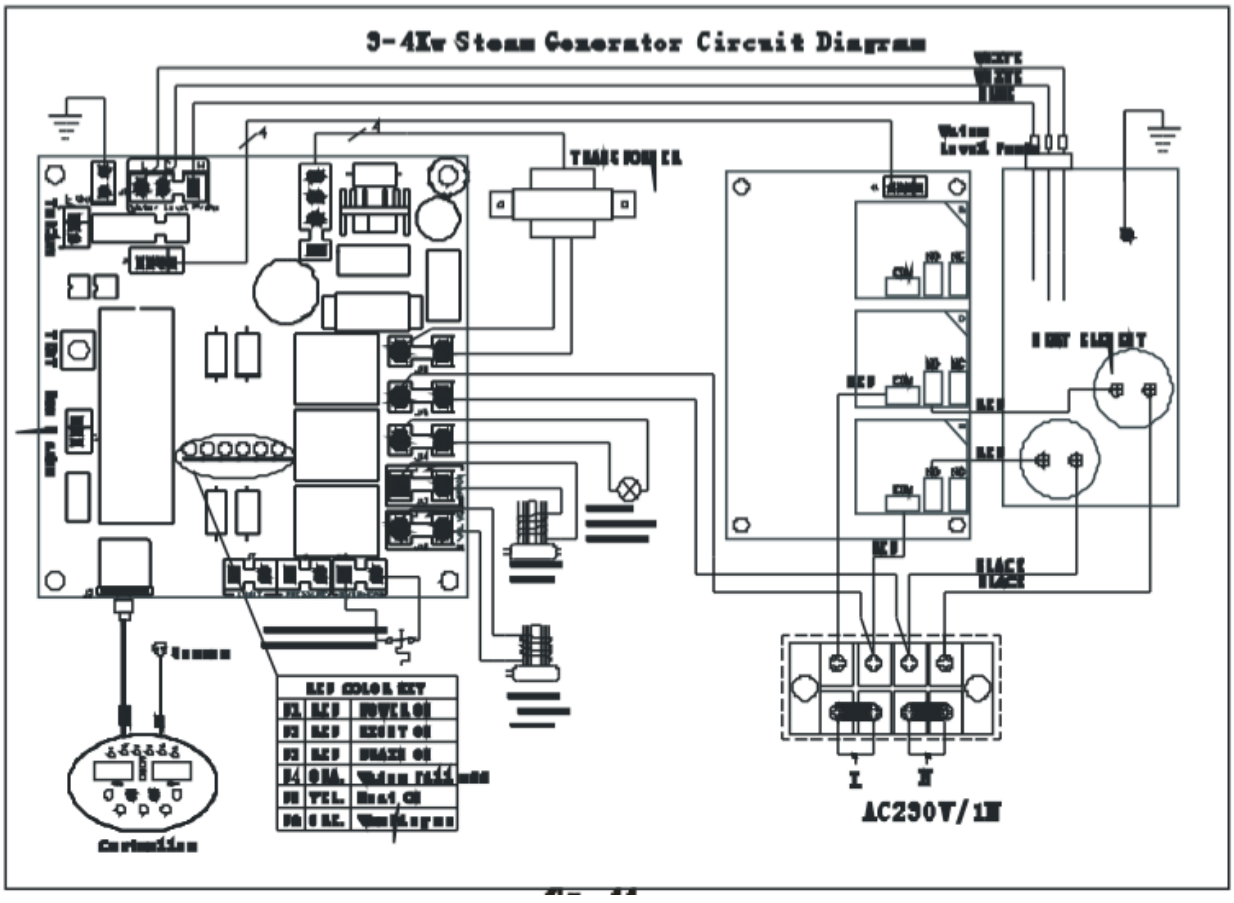

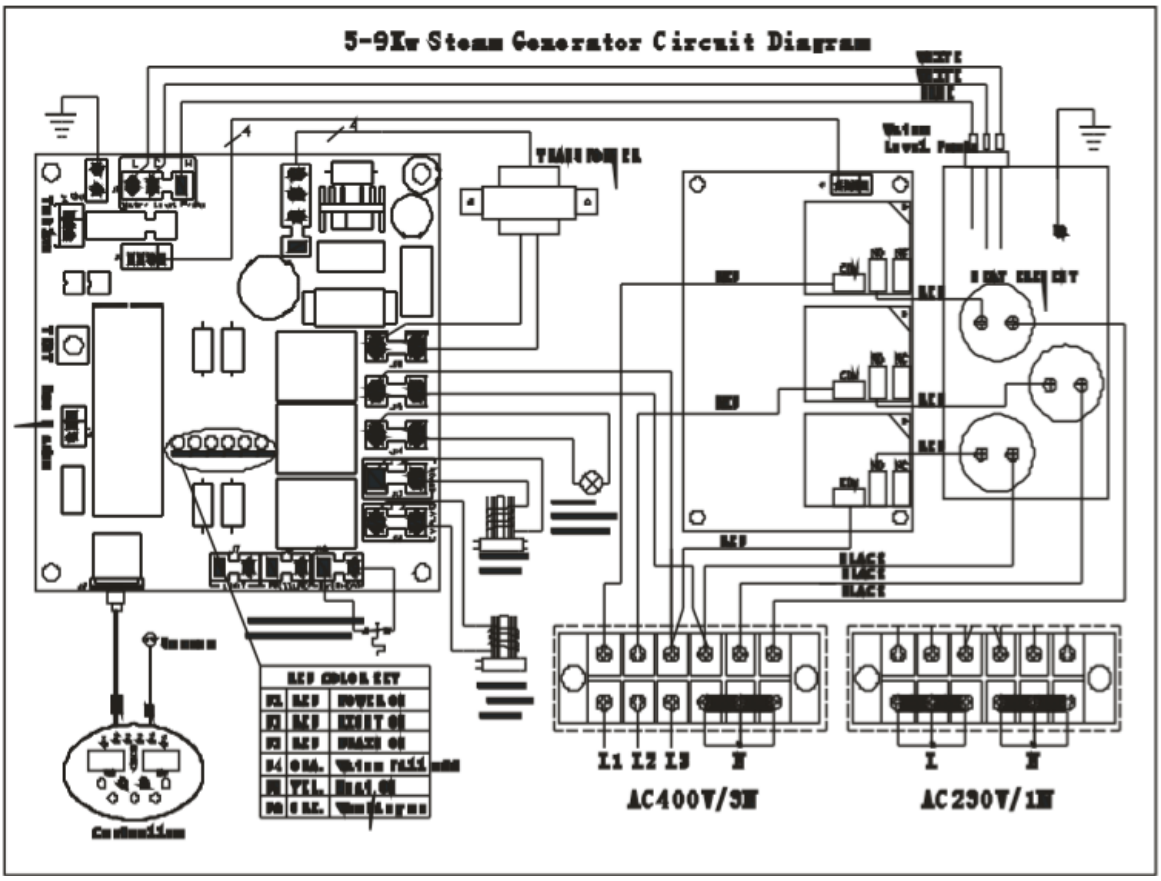
5-9Kw Steam Generator Circuit Diagram
L1 L2 L3
AC400V/3N
AC230V/1N

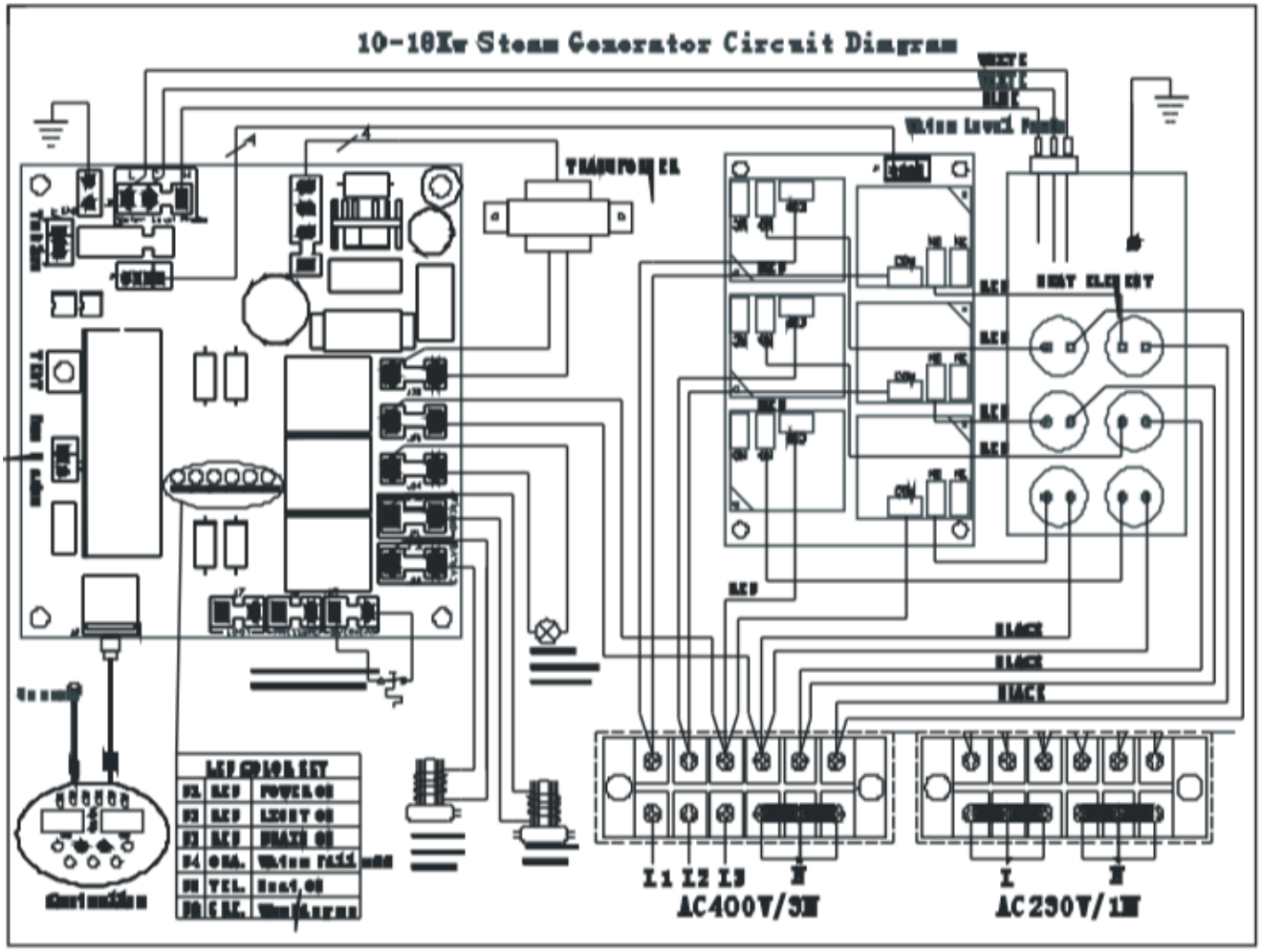
10-18Kw Steam Generator Circuit Diagram
L1 L2 L3
AC400V/3N
AC230V/1N

10. Testing and operation

i. Check water, drain and steam connections are all safe and sealed.
ii. Switch on main power to the machine.
iii. If connected you can switch on the lights using the light button independently of the temperature and time settings for example if you wanted to use the room as a shower without steam.
iv. Push the On/Off button The keypad will now illuminate
v. Push SET – Time will now flash – Use Up and Down Arrows to change time – Press ENTER to save settings.
vi. Push SET Twice – Temperature will now flash – Use Up and Down Arrows to change temperature – Press ENTER to save settings.
vii. You can switch between Celsius and Fahrenheit by holding the ENTER button for 2 seconds.
viii. Once the generator has surpassed the set temperature L8 will go red and the machine will cut out. Once it drops below the set temperature it should begin steaming again.
ix. To set STEAM ON DEMAND – hold the drain button for 10 seconds until the screen says LONG and L4 goes red. The temperature can still be adjusted in the same way as above. Now when someone pushes the red button the generator will steam for 30 minutes until the set temperature is reached.

10.1. Setting time and temperature.

When the steam generator leaves the factory the default settings are 40° and 1 hour of operation these can be adjusted as follows;

i. Time setting: press "set" key – the time display window will flash - press "/\",\/" to adjust the time, every press, the time will increase or reduce 5 minutes, once the desired setting is reached press "enter" the window will stop flashing. You can adjust from the time from 15 to 240 minutes or no time limited. Note the controller has a memory function, if the power supply is not cut off the next time you turn on steam generator the time you selected will be the default time.
ii. Temperature setting: if you press "set" once after you finish setting the time or otherwise twice the temperature window will flash, enter the required temperature by pressing "/\",""\/" to adjust - every press will increase or reduce 1° .you can adjust from 30°-60° once the required temperature has been set press "enter" key the window will stop flashing.

10.2. Steam on Demand

(Commercial Generators only 9, 10.5, 12KW)

i. To set the generator to commercial mode ("steam on demand" mode) you will need both the digital controller and the steam on demand button plugged into the circuit board.
ii. Set the desired temperature using the method above.
iii. Hold the drain button for 5 seconds, the word LONG will now appear on the screen and L4 will turn red (note this isn't the same as setting the time to long).
iv. Your generator is now ready for steam on demand, push the button and it will steam for 30 minutes until pressed again when it will go for another 30 minutes.

v. If the button is not pressed for five minutes after it shuts down it will automatically go into it drain cycle, it will take around 8 minutes for this to complete itself. The generator will take in more water when it is draining to flush out the boiler, this action is designed to minimize the build up of lime scale but not allow the elements to dry out while they are still hot. The process will only occur after the generator has operated for more than 10 minutes or more
vi. To deactivate "steam on demand" hold drain for 5 seconds until L4 changes green.

11. Troubleshooting guide

Please note that we recommend all repairs are carried out be a suitably qualified person.

Trouble description	Cause Something is wrong with:	Solution
When the generator is turned on there is no display on control panel.	Connection Power supply Transformer. Main circuit board controller Control cable or port Connection Fuse	1. Check you have power to the main terminals. 2. Check fuse. 3. Disconnect control cable from main circuit board, spray multipurpose lubricant or electrical connection cleaner on the pins and in the socket, blow away excess, reconnect. 4. If there are no RED LEDs on the main circuit board the transformer has failed or has a loose connection.
Control panel lit up but no steam.	Water probe Control lead connection Water supply	1. If L2 is green, L7 is yellow remove the water level probe, clean off any scale, return probe. Test 2. Disconnect control cable from main circuit board, spray multipurpose lubricant or electrical connection cleaner on the pins and in the socket, blow away excess, reconnect. 3. If L2 is red, check water supply, if ok shut of water and take inlet valve apart, clean filter and return. If still red replace inlet valve.
Circuit breaker tripping out.	Element failure Loose Earth Wire Faulty connection	1. To check elements use a insulation tester, or fault find by disconnecting individual elements one by one. 2. Check earth connections are tight. 3. If above fails, return generator to supplier for repair, guarantee information below.
Temperature window displays "LC"	The temp sensor connection	1. Check connection or change temp sensor. 2. If above fails replace sensor.
Temperature window display "HC"	Temp sensor is short circuit.	1. Check connection or change temp sensor. 2. If above fails replace sensor.
Water runs through steam nozzle in room.	Water inlet valve. Level sensor.	1. Turn machine off, if water continues clean inlet valve or replace. 2. If runs while machine is on try above if fails clean water probe and check connection to circuit board.
Generator works when switched off on the control panel.	Relays	1. Replace relay PCB.

12. Maintenance

Steam Generator Maintenance videos can be found on **Oceanic Saunas Ltd** channel on Youtube.com

The single biggest problem with steam generation is the build up of scale resulting from dissolved solids within the water. Scaling can cause the elements to fail, the water level sensors not to function, premature failure of the O-rings resulting in leaks from around the elements. The extent of the problem will vary according to the degree of hardness in the local water supply.
For all commercial operators we recommend the use of a water softener.

Expect 2500 hours element life, this can be serious depleted by poor maintenance.

All users commercial and domestic must ensure a regular maintenance routine to descale the generator – the frequency of this will vary according to the degree of hardness in the local water supply and the amount of time the generator is used for. Check the water for hardness and arrange the descaling routine accordingly: -
High levels of hardness descale once every 50 to 100 hours of operation.
Medium levels of hardness descale once every 100 to 250 hours operation.
Low levels of hardness descale once every 250 to 1000 hours of operation.

To descale the generator use a solution of weak acid crystals (such as citric acid) mixed with water Citric acid can be purchased from:
www.thebathingplace.com
www.oceanic-saunas.eu

12.1. Descaling procedure

i. Firstly push the drain button to empty the tank, check the valve is draining. Once the machine has finished draining isolate the mains power.
ii. Unscrew the top plate of the machine which says water level probe, disconnect the probes wires with a flat screw driver and pull the probe out.
iii. Fill the machine using a funnel with 5-6 litres of pre mixed citric acid.
iv. Replace the probe and reconnect.
v. Heat the machine for 2 minutes.
vi. Leave the machine for 4 hours minimum
vii. Drain 2-3 times.

Follow the instruction supplied with the crystals and allow sufficient time for the solution to dissolve the scale before flushing out the generator. For best results add to water, steam for two minutes then leave overnight. Empty the next days and flush twice using drain cycle.

Faults arising from a result of a failure to descale the generator are not covered by warranty.
Because heating and cooling cause expansion and contraction it is important to inspect all the water and steam inlets and outlets as well as their pipes and connectors on a regular basis to ensure there are no leaks.
Clean the filter net in the magnetic valve according to the water quality in the location.
The condition of the wiring and electrical integrity of the generator should be checked regularly - for commercial operators this should be at least once a year.

13. Guarantee

All generators are guaranteed for 12 months for domestic and commercial use from the date of purchase. This guarantee excludes consumable items such as the electrical elements and failures resulting from misuse or abuse such as a failure to descale as explained previously.
If you are using the generator for more than 20 hours a week in a hard water area without a water softener your guarantee will be invalidated.

If you encounter any difficulty with this assembly procedure or think we could have explained anything more clearly we would welcome your comments, please call T: 01902 450550 or T: 01902 871127 technical help line.